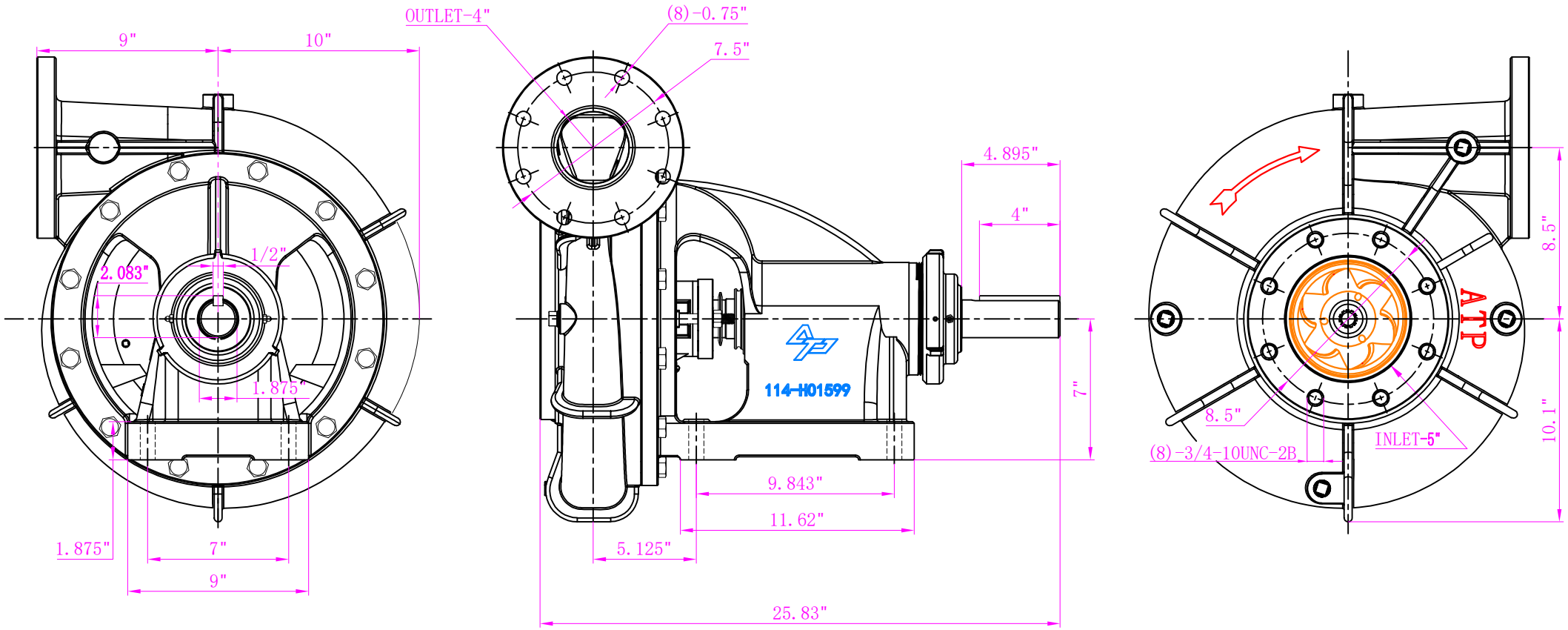

REVISION DESCRIPTION		MODIFY	DATE
[A]			
[B]			
[C]			
[D]			

NOTE:

DESIGN:
CHECK:
APVD:
DATE:

FIRST ANGLE PROJECTION

OUTLINE OVERALL AND INSTALLING DIMENSIONS

101-B66923 CCW

PROPORTION: REV: 01
SHEET: OF ICAD

UNLESS SPECIFIED DIMENSIONS: INCH

ATP